F

D

C

B

A

NOTE:
ALL WALL SHEATHING SHALL BE ATTACHED W/ #6 SCREWS MIN. @ 12" O/C MAX.

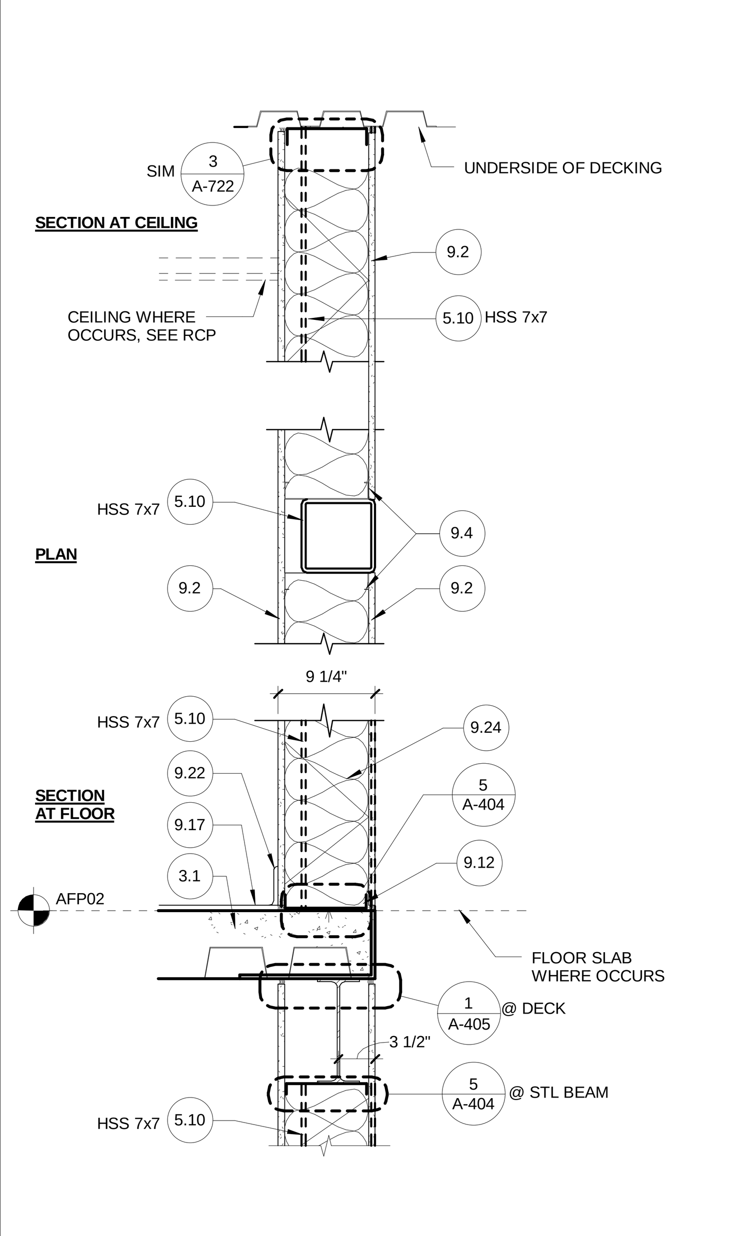

RATED SHAFT WALL @ ELEVATOR

24 **1-HR RATING UL DESIGN #U419 - 8" METAL STUD**

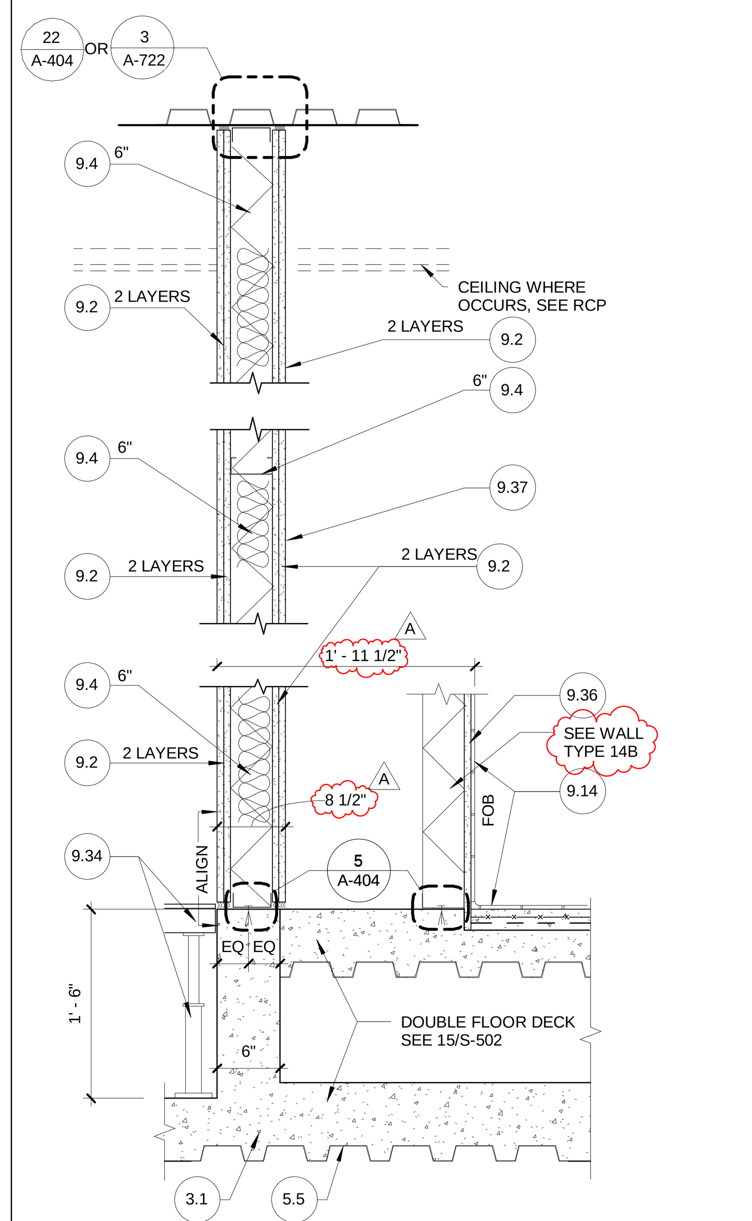

2HR FIRE RATED WALL @ ACCESS FLOOR

22 **6" METAL STUD**

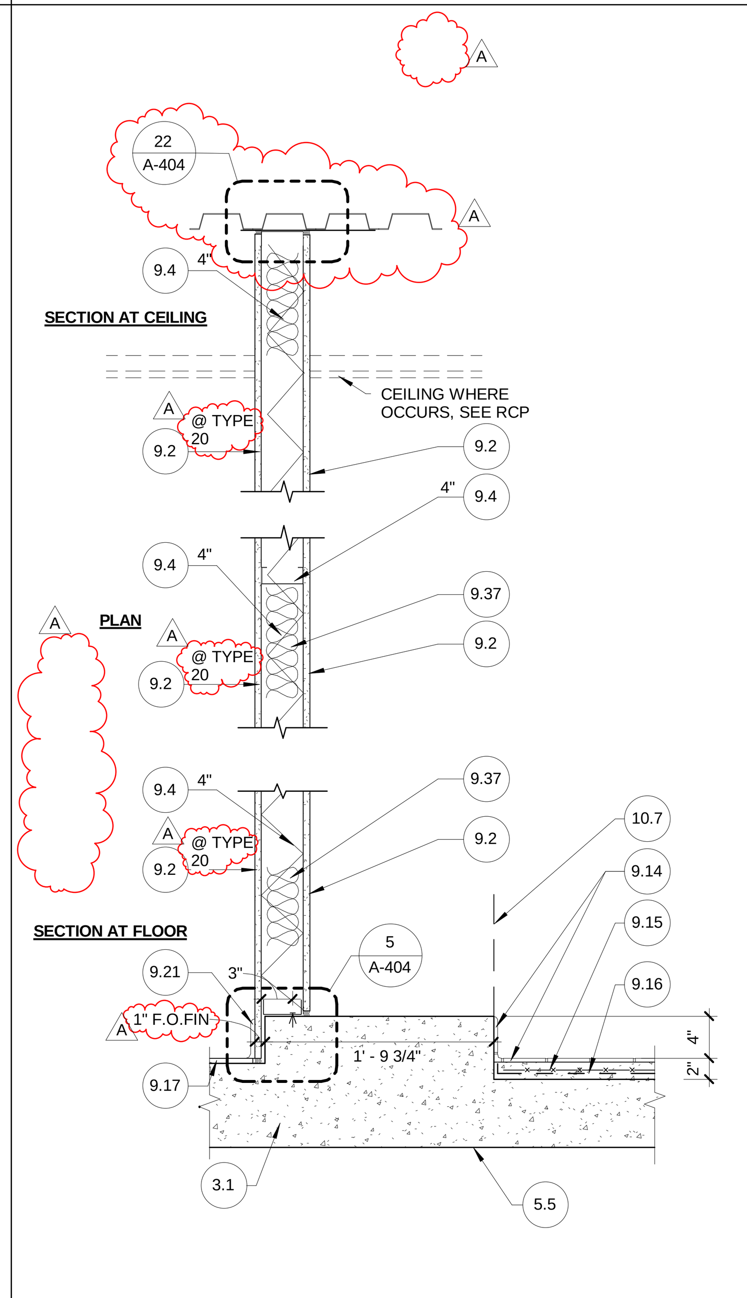

RESTROOM PARTITION AT LOCKER BASE

A 20 **4" METAL STUD, GWB BOTH SIDES**

20A **4" METAL STUD, GWB ONE SIDE**

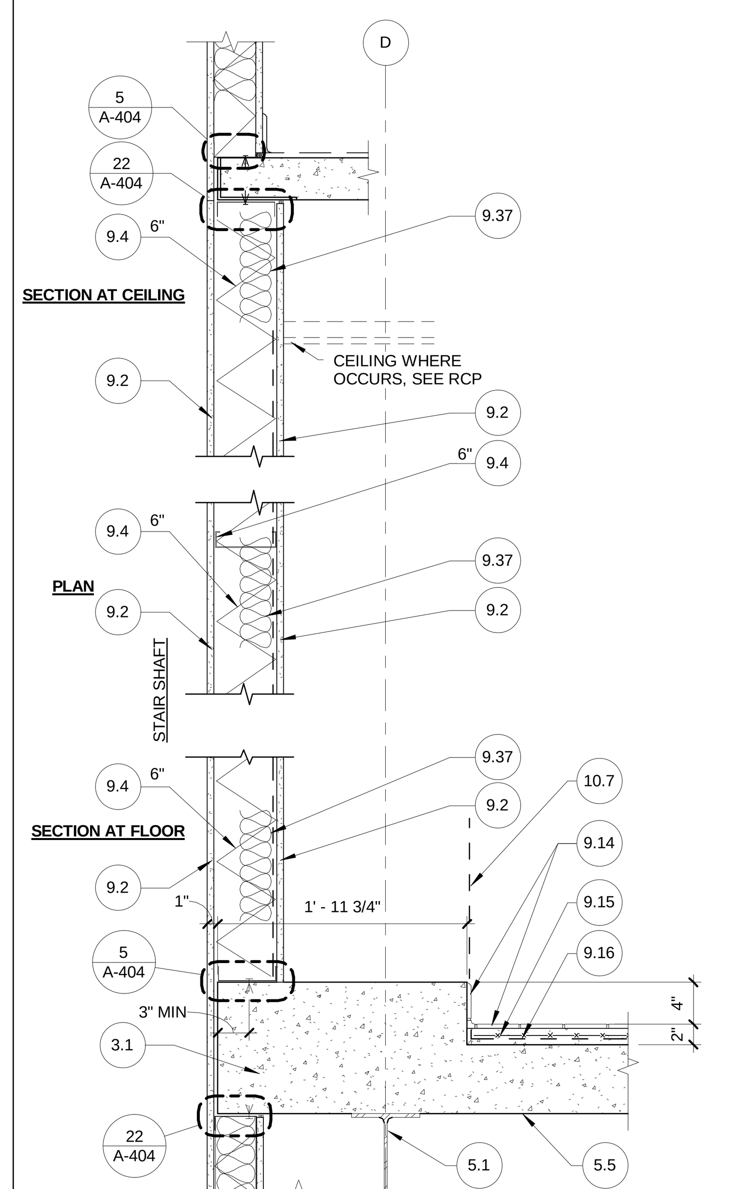

1HR RATED WALL @ STAIR SHAFT

18 **UL DESIGN #U419 - 6" METAL STUD**

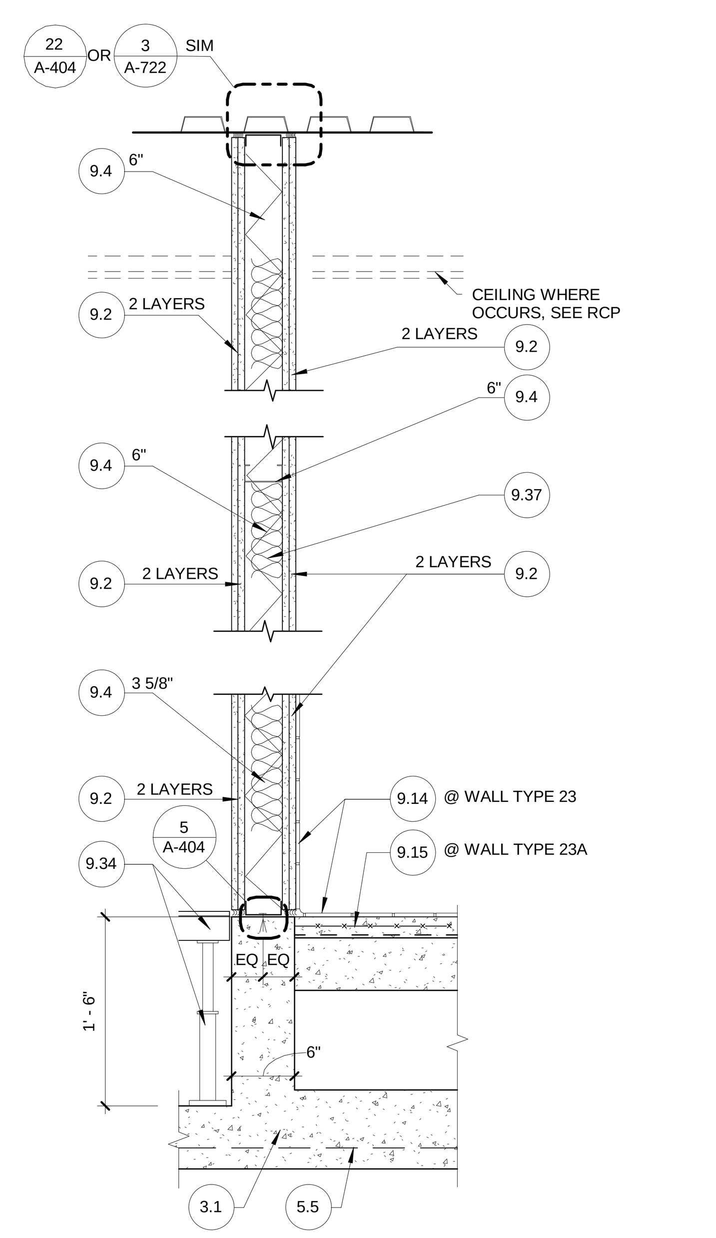

2HR FIRE RATED WALL @ ACCESS FLOOR AND RESTROOM

23 **UL DESIGN #U419- 6" METAL STUD W/ CERAMIC TILES**

23A **UL DESIGN #U419- 6" METAL STUD W/OUT CERAMIC TILES**

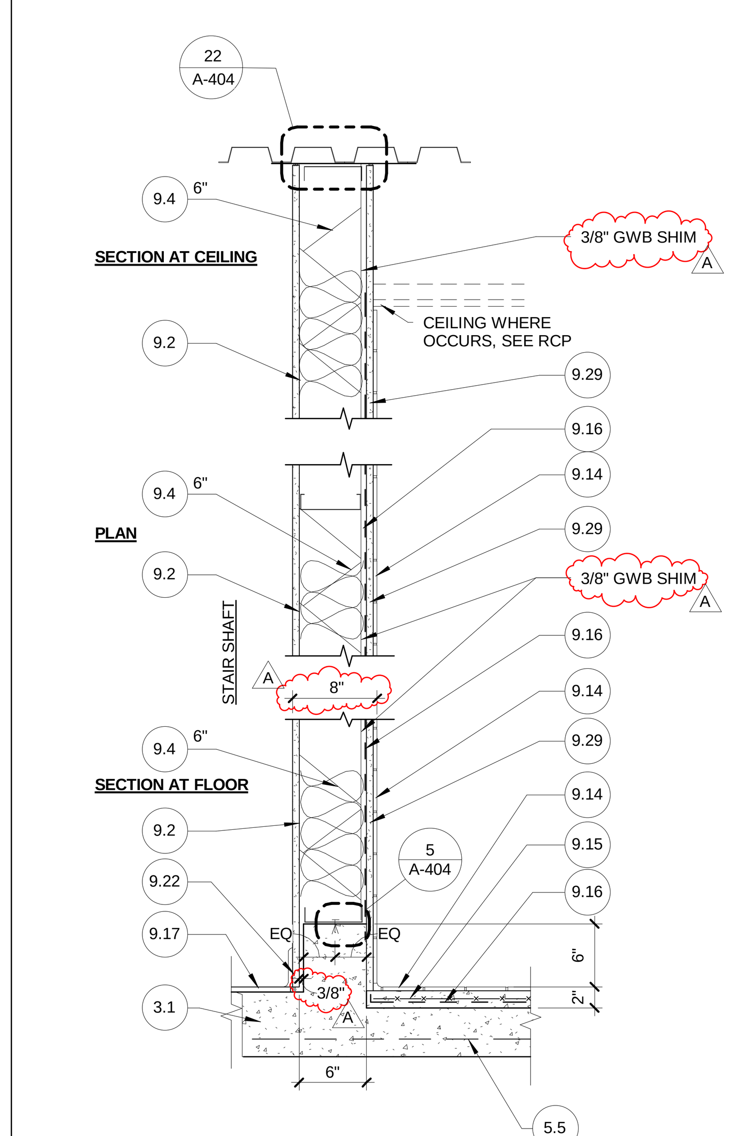

SHOWER WALL WITH CERAMIC TILE ON ONE SIDE

21 **6" METAL STUD**

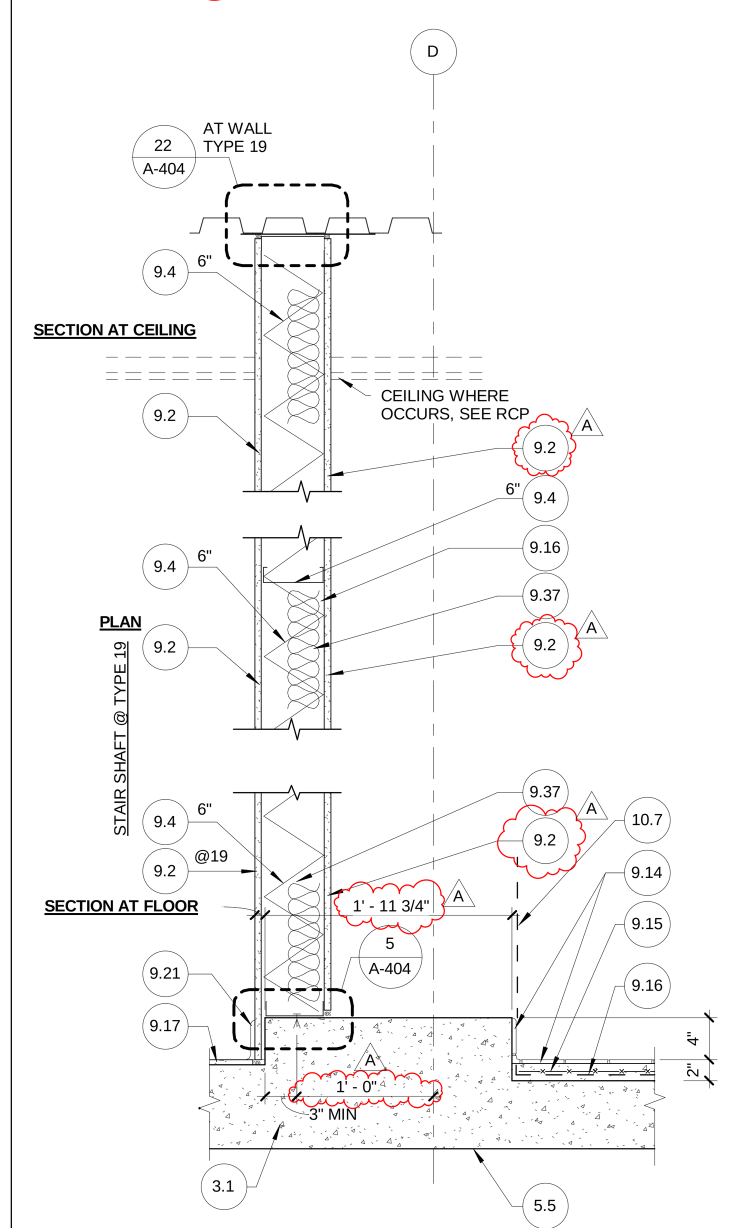

RESTROOM INTERIOR PARTITION AT LOCKER BASE

19 **1 HR FIRE RATED UL DESIGN #U419 - 6" METAL STUDS**

19A **NON-RATED - 4" MTL. STUDS**

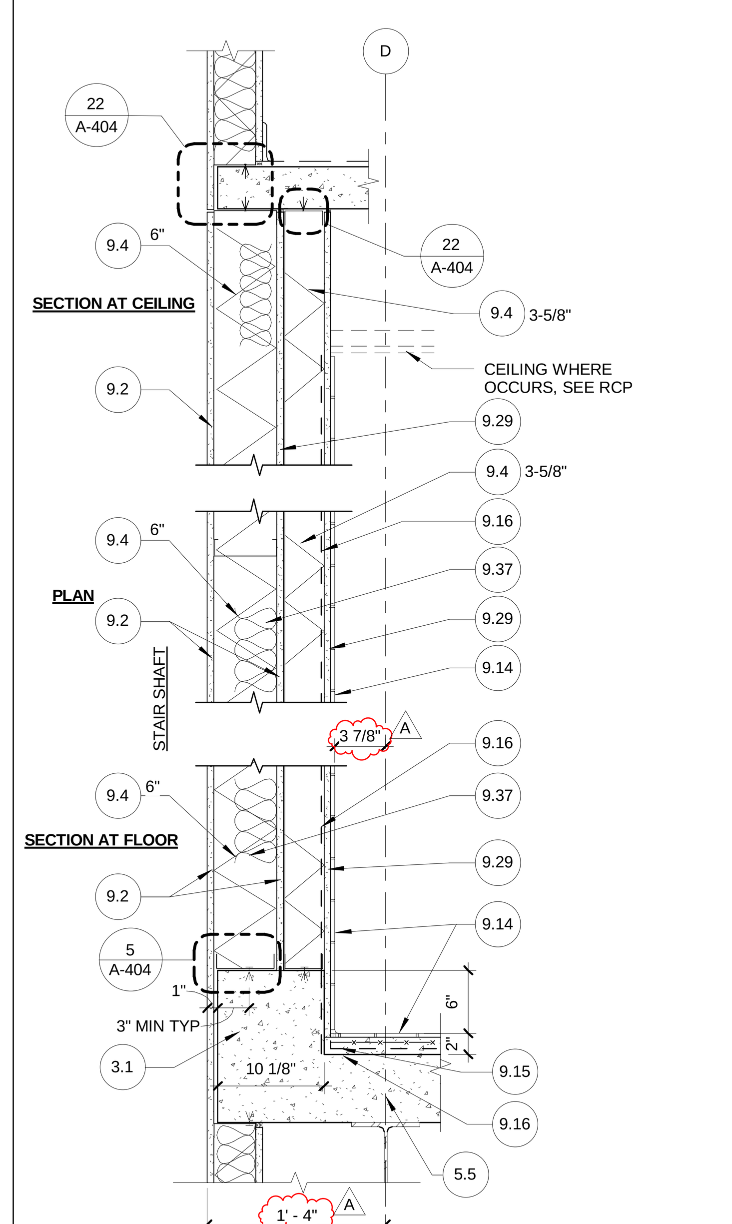

1HR SHOWER WALL

17 **UL DESIGN #U417 - 6" METAL STUD W/ 3-5/8" MTL STUD FURRING**

MATERIAL KEYNOTES

DIVISION 03 CONCRETE		DIVISION 09 FINISHES (CONTINUED)	
3.1	CAST IN PLACE CONCRETE	9.15	REINFORCED MORTAR SETTING BED
3.2	10 MILL VAPOR RETARDANT	9.16	WATERPROOFING MEMBRANE
3.3	6" CONCRETE HOUSEKEEPING PAD	9.17	SCHEDULED FLOORING
3.4	GRADE BEAM	9.18	SUSPENDED ACOUSTICAL PANEL
3.5	CONCRETE STOP		CLG SYSTEM, 2'X2" (ACT-2)
		9.19	SUSPENDED ACOUSTICAL LINEAR PLANK
DIVISION 04 MASONRY			CLG SYSTEM (ACT-1)
4.1	NOT USED (D)	9.20	SUSPENDED GYP BOARD SOFFIT SYSTEM
4.2	CMU SPLIT FACE	9.21	1" ACOUSTICAL BLACK FACED INSULATION BLANKET
		9.22	SCHEDULED WALL BASE
DIVISION 05 METALS		9.23	PAINT
5.1	STEEL BEAM	9.24	ACOUS INSULATION, 3-INCH (UON)
5.2	STEEL COLUMN	9.25	TYPE "S" SCREWS @ 12" O/C (UON)
5.3	EXPOSED STEEL COLUMN	9.26	WIRE HANGER 12 GA MIN (UON), SEE SHEET A-740
5.4	EXPOSED STEEL BRACE	9.27	16 GA FRAMING CLIP
5.5	METAL DECK	9.28	METAL Z-CLIP
5.6	STEEL CHANNEL	9.29	5/8" CEMENTITIOUS TILE BACKER BOARD
5.7	STEEL ANGLE (SST-WHERE NOTED)	9.30	REVEAL
5.8	STEEL PLATE-GALV (SST-WHERE NOTED)	9.31	EXTRUDED ALUMINUM "J" MOLDING
5.9	STEEL PIPE (SST WHERE NOTED)		"FRY REGLET" NO. 2054 OR EQUAL
5.10	TUBULAR STEEL	9.32	GYPSUM BOARD CONTROL JOINT
5.11	STEEL BRACING	9.33	3-COAT CEMENT PLASTER SYSTEM (092400)
5.12	STEEL BENT PLATE (SST WHERE NOTED)	9.34	ACCESS FLOORING (096900)
5.13	STEEL LADDER GALVANIZED	9.35	FURRING CHANNEL MIN. 20 GA, SIZE AS NOTED
5.14	METAL GRATINGS GALVANIZED	9.36	5/8" GLASS MAT FACED TILE BACKER BOARD
5.15	METAL ROOF DECK CEILING SYSTEM (EPICORE 3.5)	9.37	SOUND ATTENUATION BLANKET
5.16	ANCHOR BOLT W/ EXPANSION SHIELD	9.38	TERRAZZO STAIR TREADS
5.17	OPEN WEB JOIST	9.39	ACOUSTICAL WALL PANELS (098413)
5.18	EXPANSION JOINT COVER		
5.19	EXT. COLD FORMED METAL FRAMING, SEE STRUCT.		
5.20	SAFETY & TIE BACK ANCHOR	DIVISION 10 SPECIALTIES	
5.21	BASIS OF DESIGN MODEL: # PB75-S BY PRO-BEL	10.1	MARKER BOARD, SIZE AS NOTED
		10.2	TACK BOARD
DIVISION 06 WOOD, PLASTIC AND COMPOSITES		10.3	TOILET PARTITION
6.1A	WD BLOCK./NAILER PRESSURE TREATED	10.4	NOT USED
6.1B	WOOD BLOCKING/NAILER FR TREATED	10.5	FIXED SUNSCREENS (107113)
6.2	PLYWOOD 3/4", FR TREATED	10.6	BUILDING DIRECTORY
6.3	PLASTIC LAMINATE	10.7	METAL LOCKER
6.4	WOOD CABINETS	10.8	FIRE EXTINGUISHER CABINET (FEC)
6.5	MEDIUM DENSITY FIBERBOARD	10.9	FIRE EXTINGUISHER (FE)
6.6	SOLID-SURFACING-MATERIAL COUNTERTOP	10.10	METAL STORAGE SHELVING
6.7	5/8" GLASS-MAT FACED GYP SHEATHING (061600)	10.11	NOT USED
6.8	1/2" ORIENTED STRAND BOARD (OSB)	10.12	CORNER GUARD
	ROOF SHEATHING (061600)	10.13	CRASH GUARD
		10.14	NOT USED
DIVISION 07 THERMAL & MOISTURE PROTECTION		10.15	DOOR STOP (FLOOR MOUNTED)
7.1	CONCRETE ROOF TILES		
7.2	STAINLESS STEEL FLASHING / COUNTERFLASHING	DIVISION 11 EQUIPMENT	
7.3	NOT USED	11.1	REFRIGERATOR
7.4	POLYVINYL-CHLORIDE (PVC) ROOFING (075419)	11.2	RANGE/STOVE TOP
7.5	MEMBRANE EDGE FASTENER @12" OC	11.3	MICROWAVE OVEN
7.6	SAND COATED ROOF WALKWAY (075419)	11.4	DISHWASHER
7.7	RIGID ROOF INSULATION OF AGED R=30	11.5	VENDING MACHINE (N.I.C.)
	OR 5 1/2" MIN. (UON) (075419)	11.6	MOTORIZED PROJECTION SCREEN
7.8	RIGID ROOF INSUL TAPERED R=30 or 5.5" MIN (075419)	11.7	VIDEO WALL SYSTEM (GFEI)
7.9	NOT USED	11.8	PROJECTOR (N.I.C.)
7.10	FIRE STOPPING SYSTEM	11.9	WALL MOUNTED PLASMA TV (N.I.C.)
7.11	1/2" GLASS MAT FACED PROTECTION BOARD	11.10	CONTROL UNIT
7.12	BATT INSULATION R=19 (UON)	11.11	POWER UNIT
7.13	INSECT SCREEN	11.12	CONDUIT
7.14	PVC MEMBRANE FLASHING	11.13	PAPER TOWEL HOLDER
7.15	PVC WRAPAROUND PIPE SEAL		
7.16	5/8" GLASS MAT FACED THERMAL BARRIER	DIVISION 12 FURNISHINGS	
7.17	CRICKET	12.1	MANUAL SUNSHADE (122413)
7.18	EXTRUDED ALUMINUM TRIM	12.2	MOTORIZED BLACKOUT SHADE (122413)
7.19	ALUMINUM FLASHING	12.3	MANUAL SUN/BLACKOUT SHADE COMBO (122413)
7.20	FORMED SHEET S.S. COPING	12.4	MOTORIZED SUN/BLACKOUT SHADE COMBO (122413)
7.21	NOT USED (D)	12.5	SYSTEM FURNITURE (GFEI)
7.22	DRAINAGE GEOCOMPOSITE (071416	12.6	CONTROL CONSOLES (GFEI)
7.23	BELOW GRADE WATERPROOFING (071416)	12.7	ENTRANCE FLOOR GRILLE (124816)
7.24	SST CLAMPING RING	12.8	HORIZONTAL LOUVER BLINDS (122113)
7.25	PREFABRICATED ROOF CURB-INSULATED		
7.26	SEALANT WITH BACKER ROD	DIVISION 14 EQUIPMENT	
7.27	SEALANT (FR & ACST WHERE NOTED)	14.1	HYDRAULIC ELEVATORS (142400)
7.28	NEOPRENE WASHER OR PAD		
7.29	#30 FELT	DIVISION 22 PLUMBING	
7.30	FIRE TRACK SHADOWLINE	22.1	ROOF DRAIN
7.31	FIRE SAFING INSULATION	22.2	OVERFLOW DRAIN
7.32	EPDM GASKET	22.3	VENT THRU ROOF
7.33	20 GA GALVANIZED SPLASH PAN (076200)	22.4	ELECTRIC WATER COOLER
7.34	DOWN SPOUT (076200)	22.5	KITCHEN SINK
7.35	20 GA GALV. GUTTER (076200)	22.6	SERVICE SINK
7.36	PERFORATED SHEET ALUMINUM (ALP-1)	22.7	WATER CLOSET
7.37	GALVANIZED METAL FLASHING (076200)	22.8	LAVATORY
7.38	THERMOPLASTIC WATERPROOFING SYSTEM (071354)	22.9	URINAL
7.39	NOT USED	22.10	FLOOR DRAIN
7.40	5/8" GLASS-MAT FACED WATER RESISTANT	22.11	AREA DRAIN
	GYP SUBSTRATE BOARD	22.12	FLOOR SINK
7.41	MECHANICALLY FASTENED FIBERGLASS	22.13	SUMP
	INSULATION BOARD R=13	22.14	PORTABLE EYE WASH STATION (224500)
7.42	SPRAY-ON CEMENTITIOUS FIREPROOFING	22.15	WATER HYDRANT
7.43	SEALANT TAPE	22.16	RAIN GUTTER DRAIN PIPING
7.44	PVC CLADDED OVERFLOW SCUPPER BY ROOF MFR	22.17	VACUUM EXHAUST
		22.18	ROOF RECEPTOR
DIVISION 08 OPENINGS		22.19	FLOOR CLEANOUT
8.1	DOOR		
8.2	FRAME PER SCHEDULE TYPE	DIVISION 23 HVAC	
8.3	FRAME ANCHOR	23.1	BOILER FLUE
8.4	OVERHEAD COILING DOORS	23.2	LINEAR DIFFUSER
8.5	ACCESS DOOR-WALL	23.3	EXHAUST FAN
8.6	ACCESS DOOR CEILING	23.4	DUCT
8.7	SOUND RETARDANT DOOR-STC 55	23.5	DIFFUSER
8.8	GROUT FILL	23.6	UNIT HEATER
8.9	AUTOMATIC DOOR BOTTOM	23.7	INTAKE VENTILATOR
8.10	WEATHER-STRIPPING	23.8	E/G EXHAUST PIPE
8.11	THRESHOLD	23.9	CRAC UNIT
8.12	HM GLASS STOP	23.10	FIRE DAMPER
8.13	POWER ASSIST DOOR - WALL PLATE	23.11	RETURN AIR TRANSFER GRILLE
8.14	ALUM. STOREFRONT GLAZING SYSTEM		
8.15	ALUM. STOREFRONT ENTRANCE DOOR	DIVISION 26 ELECTRICAL	
8.16	GLAZED ALUMINUM CURTAIN WALL	26.1	LIGHT FIXTURE
8.17	INTERIOR ALUMINUM FRAMING SYSTEM	26.2	CARD READER
8.18	1" INSULATING GLAZING	26.3	CABLE TRAY
8.19	FRITTED GLAZING	26.4	EQUIPMENT RACKS
8.20	SPANDREL GLAZING	26.5	EMERG. ENGINE GENERATOR (GFCI)
8.21	1/4" THICK VISION GLASS (SAFETY WHERE NOTED)	26.6	CONDUITS
8.22	CLERESTORY WINDOW	26.7	DUCT BANK
8.23	SHIM	26.8	RADIO RACKS (GFEI)
8.24	KNOX BOX	26.9	ANTENNA CONDUIT
8.25	SS WALK-OFF GRILLE	26.10	LIGHTNING PROTECTION
8.26	EXTRUDED ALUMINUM LOUVER (UNO)	26.11	PANEL - SEE SCHEDULE
8.27	INSULATED BLANK-OFF PANELS		
8.28	EXTRUDED ALUM TRIM TO MATCH ALUM FRAME	DIVISION 31/32 EXTERIOR IMPROVEMENTS	
8.29	NOT USED	31.1	SAND
8.30	SOLAR TUBE- TUBULAR DAYLIGHTING	31.2	CRUSHED STONE
		31.3	COMPACTED SOIL
DIVISION 09 FINISHES		31.4	PERIMETER DRAIN
9.1	1/2" GWB TYPE "X"	31.5	ASPHALT PAVING
9.2	5/8" GWB TYPE "X"	31.6	CONCRETE PAVING
9.3	1" GWB SHAFT LINER	31.7	EXPANSION JOINT
9.4	20 GA MET STUD @ 16"O/C (UON), SEE SHEET A-404	31.8	COMPRESSIBLE FILLER
9.5	SLOTTED TOP TRACK	31.9	CONTROL JOINT
9.6	METAL STUD TRACK	31.11	ORNAMENTAL MTL FENCES+GATES
9.7	COLD FORMED FURRING CHANNEL	31.12	UNIT PAVERS
9.8	METAL TRIM GALVANIZED		
9.9	FRAMING ANGLE, MIN 20 GA GALV	32.1	CHAIN-LINK FENCES AND GATES
9.10	6"x110 MIL FLUSH MOUNT BACKING FOR MTL STUDS	32.2	SYNTHETIC RESILIENT SURFACE
9.11	SHAFT WALL STUDS MIN. 20 GA @ 24" OC (UNO)		
9.12	SHAFT J RUNNER		
9.13	TERRAZZO FLOORING		
9.14	CERAMIC TILE		

NOTE: 1. NUMBERS IN PARENTHESIS (-) INDICATE REFERENCED SPECIFICATION SECTION
2. FOR LIGHT GAGE METAL FRAMING AND ANCHORING DETAILS SEE SHEET A-404

PROJECT

INLAND EMPIRE TMC
Caltrans
CHP
DISTRICT 8 / INLAND DIVISION

PROJECT ADDRESS:
13892 VICTORIA STREET
FONTANA, CA 92336

CLIENT

DGS

STATE OF CALIFORNIA
DEPARTMENT OF GENERAL SERVICES
REAL ESTATE SERVICES DIVISION
PROJECT MANAGEMENT BRANCH
707 THIRD STREET, SUITE 3-305
WEST SACRAMENTO, CA 95605
PROJECT DIRECTOR : RAFAT ALAFRANJI
TELEPHONE : (916) 376-1738

DESIGNER

DMJM H&N | AECOM

999 TOWN & COUNTRY ROAD, ORANGE, CALIFORNIA 92868
T: 714-567-2400 F: 714-567-2729 www.dmjmhn.com

CONSULTANT

DSA STAMP

IDENTIFICATION STAMP
DIVISION OF THE STATE ARCHITECT
OFFICE OF REGULATION SERVICE

APPL. #: 04-109200-2

AC _______ FLS _______ SS _______
DATE ________________________

FILE NUMBER: RESD

STATUS

JULY 30, 2008

ISSUE

MARK	DATE	DESCRIPTION
D	10/31/08	BID PERIOD ADDENDUM #6
A	9/26/08	BID PERIOD ADDENDUM

PROJECT NO: 60004333.4000
DRAWN BY: Author
CHECK BY: Checker

STAMP

REGISTERED PROFESSIONAL ARCHITECT
JERRY MIKOLAJ ROZYCKI
No. C 24473
Exp. 12-31-09
STATE OF CALIFORNIA

SHEET TITLE

WALL TYPES

A-413

© 2006 DMJMH+N, Inc.